ELECTRICAL, ECU, REGULATOR, ETC. - Z26NEY99A4/B4/A6/B6 (C703116)

2026 RZR - RZR XP S 1000 ULTIMATE (R01) - Z26NEY99A4/B4/A6/B6

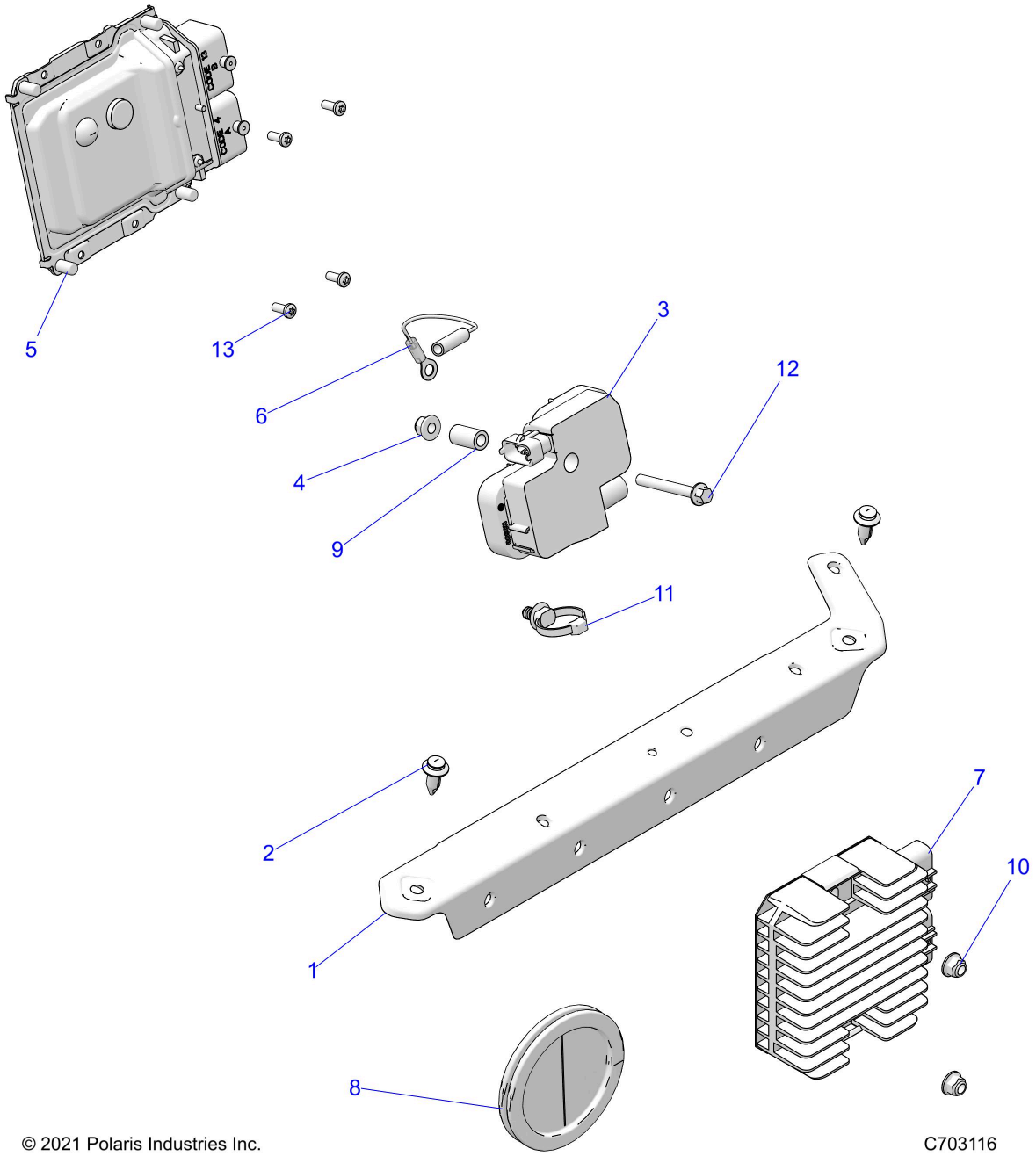

© 2021 Polaris Industries Inc. C703116

Reference #	*Part#*	*Description*	*Quantity*
1	5457339-070	FUSE BRKT,BLK	1
2	7661855	RIVET-TUFLOK,.315-.325X.787	2
3	4010425	COIL-EFI	1
4	7547274	NUT-M6 FLANGE,NYLOC	1
5	4018203	ECM-HARD,MG1,112P DEPOP	1
6	4014422	JUMPER, COIL GROUND	1
7	4016868	REGULATOR-3PH,50A,SERIES,HISPD	1
8	5417178	GROMMET-ELECTRICAL,CAB	1
9	5133658	SPACER-COIL,FRONTIER	1
10	7547339	NUT-M6X1.0, FLG-NYLOC-OLIVE D	2

11	7081496	CLIP FIR-TREE,DIA6-33MM	1
12	7517932	SCR-M6X1.0X50.0 HX/FL-Y/D	1
13	7519091	SCR-#10X1/2-HI/LO-PN-T25, TRX-M	4

Copyright 1996-2026 Polaris Industries U.S.A All rights reserved.